2026 Senior Baseball State Tournament

Tournament Director: Bev Kenney

1 Town Hall Road, Exeter RI

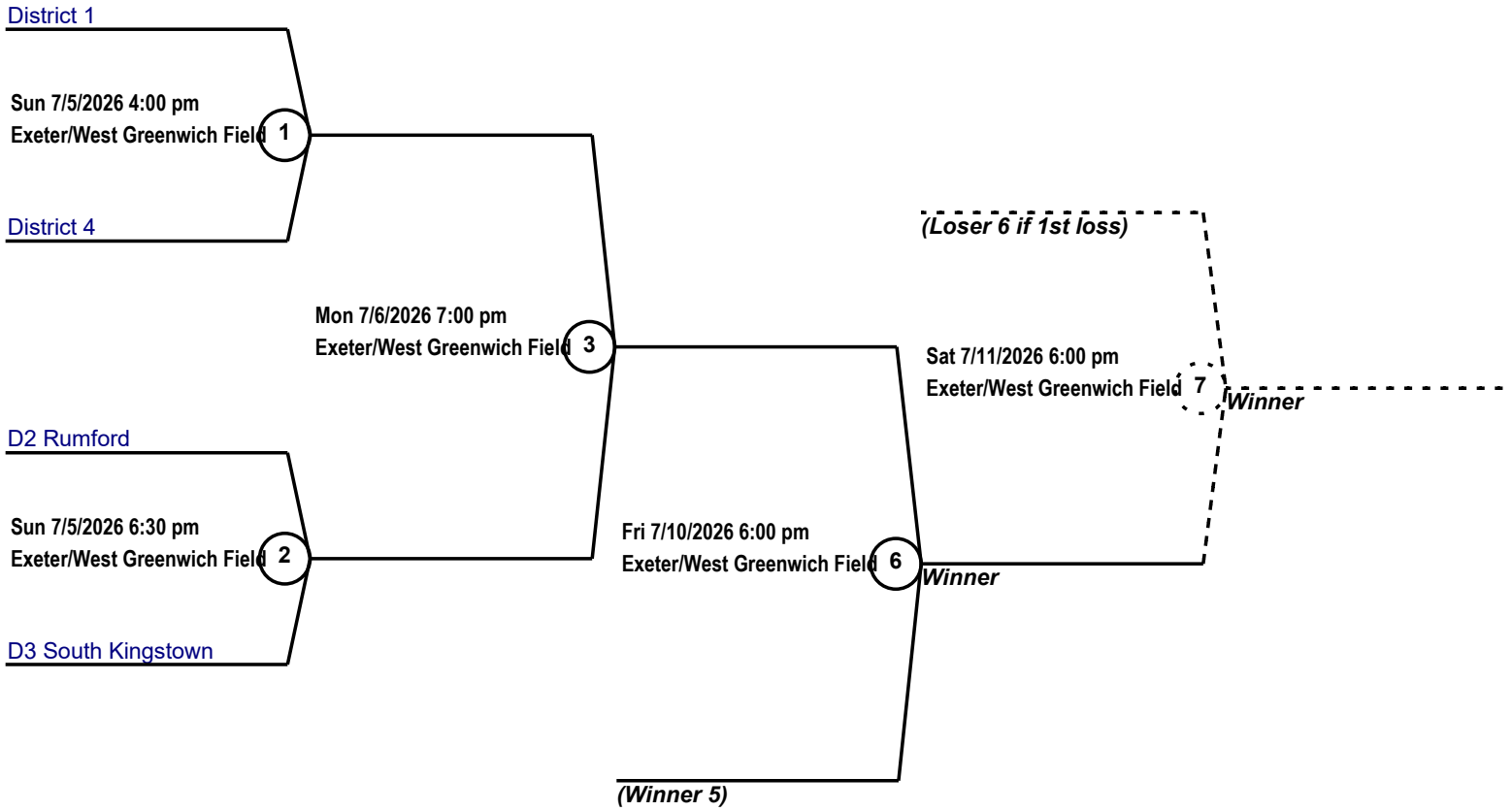

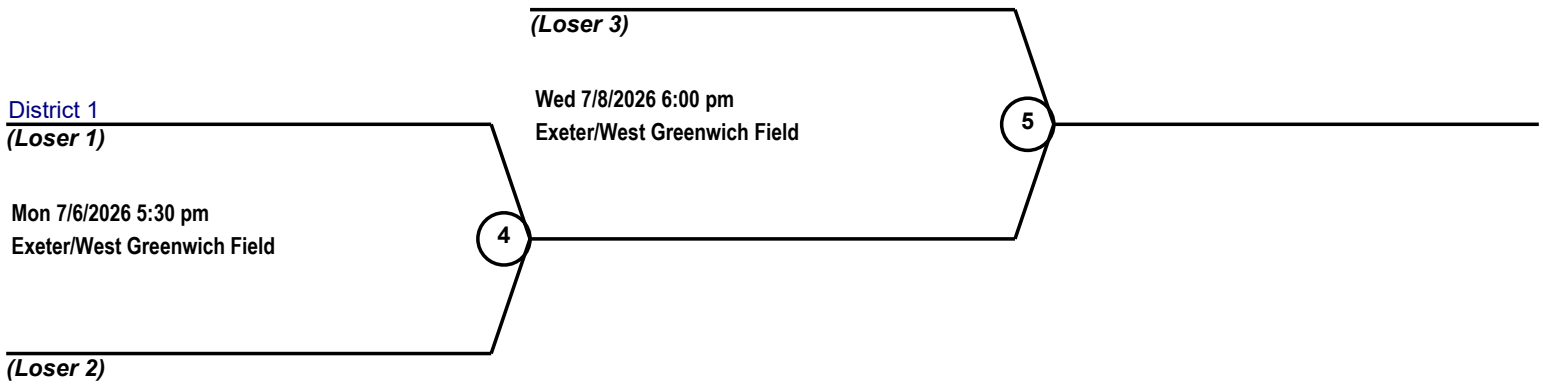

Created with Tournament Scheduler Pro from
All-Pro Software - www.allprosoftware.com